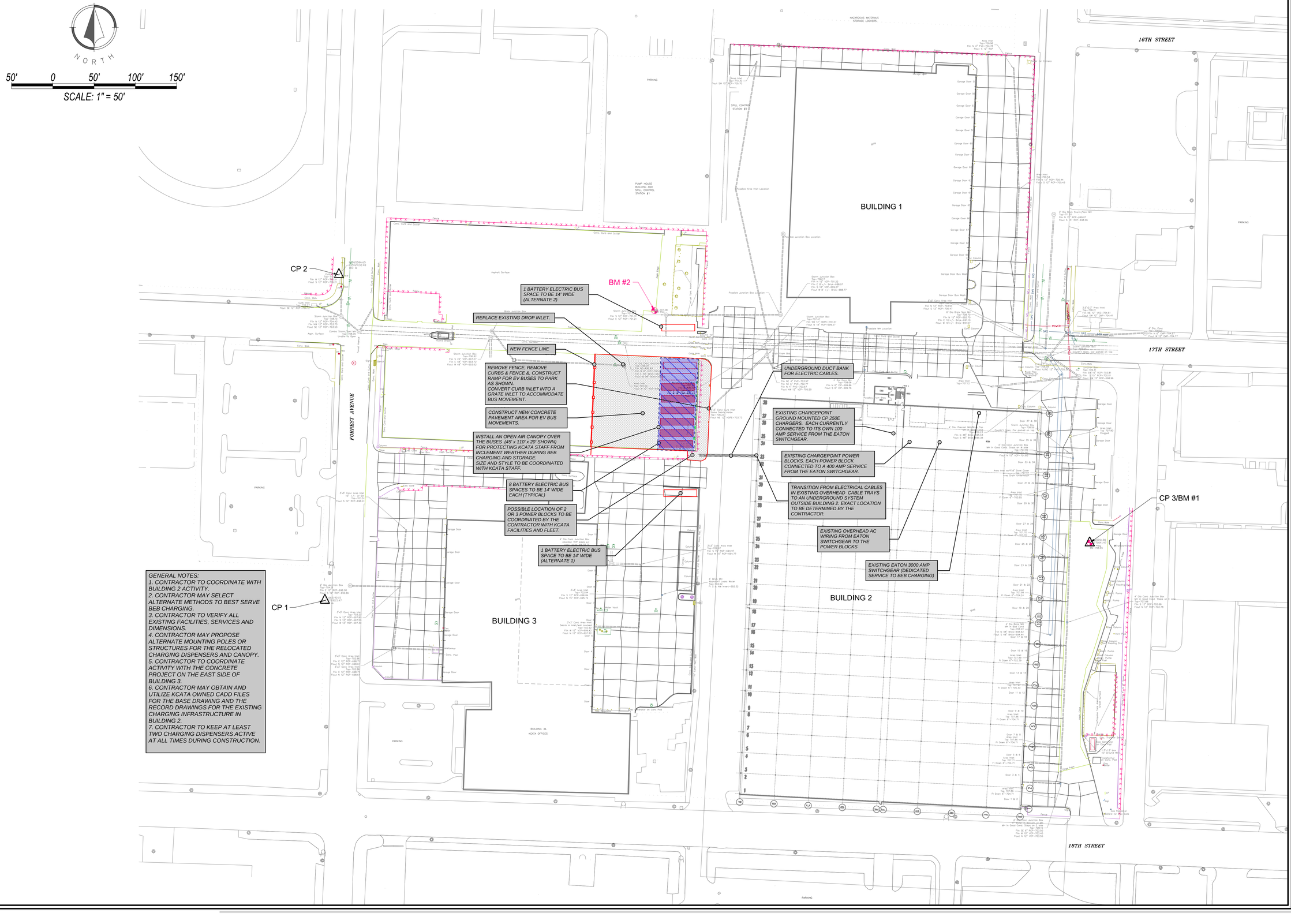

Sheet
of 20

KANSAS CITY AREA TRANSPORTATION AUTHORITY

CNG / CENTRAL COMPLEX COMPLEX PAVEMENT REPLACEMENT

SURVEY W/GIS

REVISION	DATE	CHECKED
FINAL PLAN SUBMITTAL	7/09/15	BY
ORIGINAL BID PLANS	9/22/15	BY
CHANGED PROJECT BID NUMBER	3/16/17	
CHANGED PROJECT BID NUMBER	2/21/2018	

KCATA
Kansas City Area Transportation Authority

$DATE$
Z:\RIC Design\2014\14-0217 Concrete Pavement Replacement Proj.-KCATA\Dgn\Year 1 Sheets\14-0217-Survey With GIS Exhibit.dgn

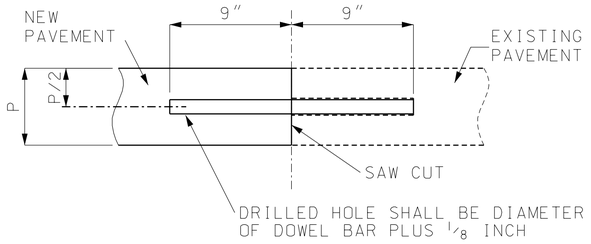

SAWED SECTION

THE CONSTRUCTION JOINT MAY BE SAWED FULL DEPTH, HOLES FOR DOWEL BARS SHALL BE DRILLED AFTER THE CONCRETE HAS SUFFICIENT SET TO PREVENT DAMAGE. DOWEL BARS SHALL BE BONDED INTO THE HOLES.

BONDING FOR DOWEL BARS SHALL BE EPOXY OR POLYESTER BONDING AGENTS AS SPECIFIED IN MODOT SECTION 1039.

THE PORTION OF THE DOWEL OUTSIDE THE HOLE SHALL BE COATED WITH AN APPROVED LUBRICANT.

CONSTRUCTION JOINT (C)

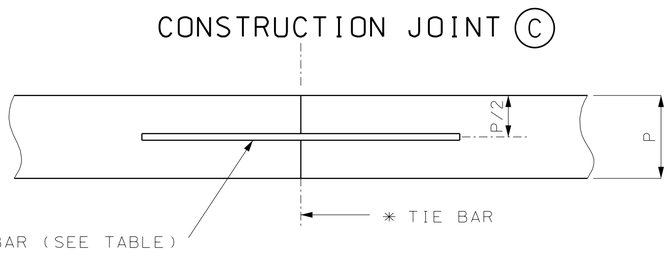

TIE BARS REQUIRED.

LONGITUDINAL CONSTRUCTION JOINT (L2)

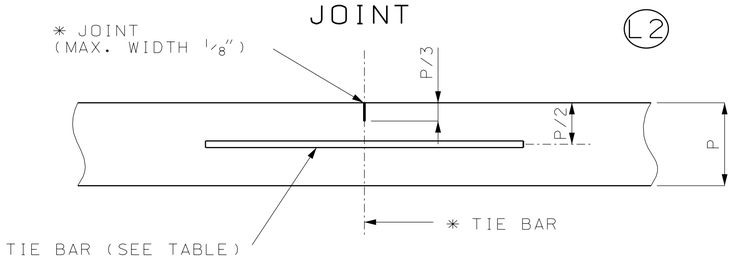

TIE BARS REQUIRED.

LONGITUDINAL JOINT (L1)

TIE BAR AND DOWEL TABLE				
PCCP THICKNESS (P)	DOWEL SIZE	TIE BAR SIZE	DOWEL SPACING	TIE BAR SPACING
LESS THAN 7"	NONE	#5X30"	NONE	30" CTR.-CTR.
7" TO 10"	1 1/4"X18"	#5X30"	12" CTR.-CTR.	30" CTR.-CTR.
GREATER THAN 10"	1 1/2"X18"	#6X40"	12" CTR.-CTR.	30" CTR.-CTR.

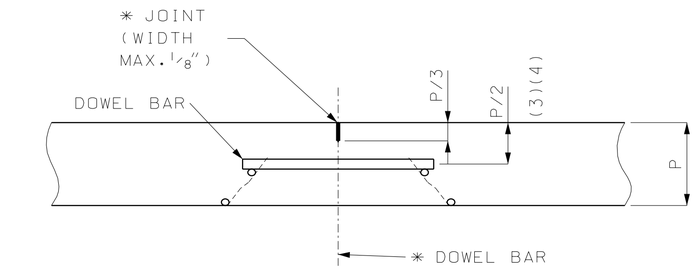

DOWELS REQUIRED. FOR PERMISSIBLE TYPES OF DOWELS SUPPORTING UNITS, SEE OTHER DRAWINGS.

TRANSVERSE CONTRACTION JOINTS FOR CONCRETE PAVEMENT OR BASE WIDENING SHALL MATCH EXISTING JOINTS.

TRANSVERSE CONTRACTION JOINT (C1) (2)

(2) DOWEL BARS ARE REQUIRED FOR ALL PAVEMENTS HAVING THE SAME THICKNESS AS THE TRAVELED WAY.
(3) FOR PAVEMENTS HAVING THICKNESS IN 1/2" INCREMENTS, DOWEL BASKETS SHALL BE P/2- 1/2".
(4) DOWEL BARS MAY BE PLACED BY MECHANICAL MEANS AT THE OPTION OF THE CONTRACTOR.

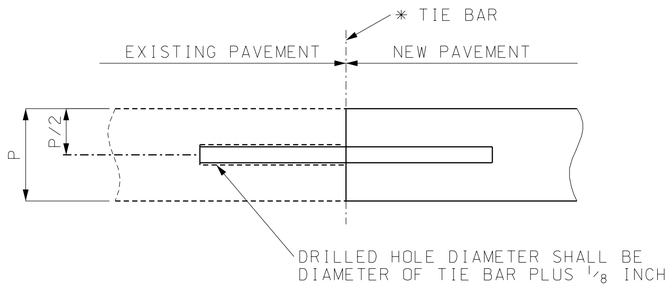

TIE BARS SHALL BE EPOXY COATED, DEFORMED REINFORCING BARS MEETING THE REQUIREMENTS OF MODOT SECTIONS 710 AND 1057.

BONDING FOR TIE BARS SHALL BE EPOXY OR POLYESTER BONDING AGENTS AS SPECIFIED IN MODOT SECTION 1039.

TIE BAR SIZE AND LENGTH SHALL BE BASED ON THE THICKNESS OF THE THINNER PAVEMENT OR SHOULDER TO BE TIED TOGETHER.

LONGITUDINAL CONSTRUCTION JOINT (EXISTING PAVEMENT) (L)

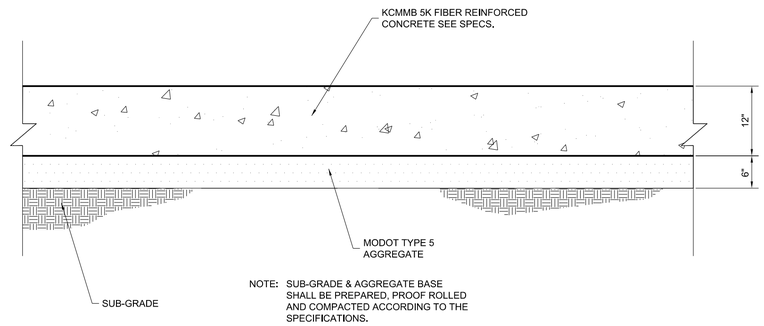

TYPICAL SECTION EXTERIOR CONCRETE PAVEMENT

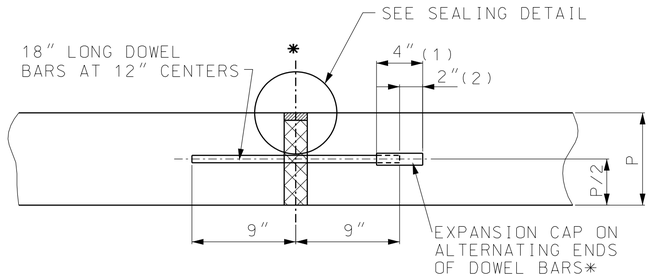

EXPANSION JOINTS (E)

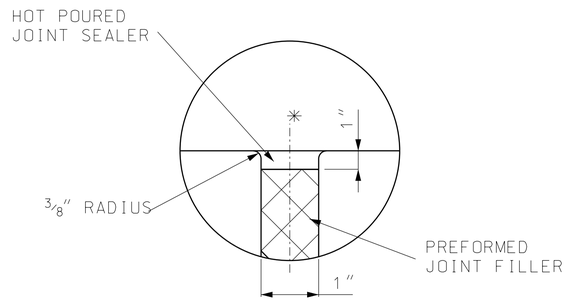

SEALING DETAIL